SERVICE SUPPORT

SERIAL NUMBER RECORD

Record serial numbers and date of purchase in spaces provided. Serial number is located on model plate mounted on frame, behind right wheel.

Date of Purchase	
Serial Number	
Engine Serial Number	

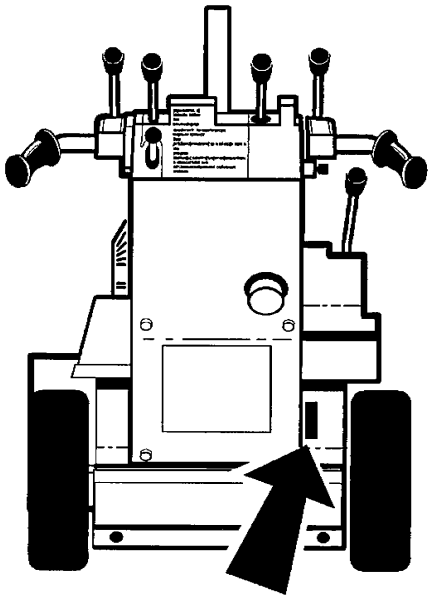

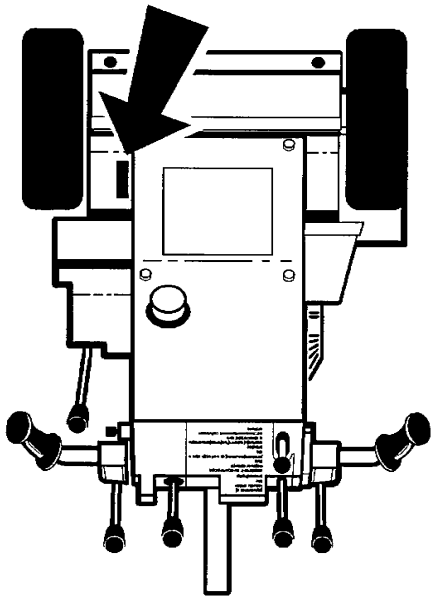

SERVICE SUPPORT

SERIAL NUMBER RECORD

Record serial numbers and date of purchase in spaces provided.
Serial number is located on model plate mounted on frame,
behind right wheel.

Date of Purchase	
Serial Number	
Engine Serial Number	

1220 Trencher - SERVICE SUPPORT
SERIAL NUMBER RECORD
Page **1**

SERVICE SUPPORT PROCEDURE

Notify your dealer immediately of any malfunction or failure of Ditch Witch equipment.

Always give model, serial number, and approximate date of equipment purchase. This information should be recorded and placed on file by owner at time of purchase.

Return damaged parts to dealer for inspection and Warranty consideration.

Order genuine Ditch Witch replacement or repair parts from your authorized Ditch Witch dealer. Use of another manufacturer's parts may void Warranty.

RELATED SERVICES

Publications

Contact your Ditch Witch dealer for publications covering operation, service, and repair of your equipment.

Ditch Witch Training Center

In 1994, Charles Machine Works, makers of quality Ditch Witch equipment, opened its new training center. At this modern facility, dealers, customers, and operators review theory and operation and gain hands-on experience. During directional boring seminars, Ditch Witch training personnel cover the boring procedure from site evaluation through breakdown. They also present the latest information in trenching technology, including safety and new products. For information about the next directional boring seminar, contact your Ditch Witch dealer.

SERVICE SUPPORT PROCEDURE

Notify your dealer immediately of any malfunction or failure of Ditch Witch equipment.

Always give model, serial number, and approximate date of equipment purchase. This information should be recorded and placed on file by owner at time of purchase.

Return damaged parts to dealer for inspection and Warranty consideration.

Order genuine Ditch Witch replacement or repair parts from your authorized Ditch Witch dealer. Use of another manufacturer's parts may void Warranty.

RELATED SERVICES

Publications

Contact your Ditch Witch dealer for publications covering operation, service, and repair of your equipment.

Ditch Witch Training Center

In 1994, Charles Machine Works, makers of quality Ditch Witch equipment, opened its new training center. At this modern facility, dealers, customers, and operators review theory and operation and gain hands-on experience. During directional boring seminars, Ditch Witch training personnel cover the boring procedure from site evaluation through breakdown. They also present the latest information in trenching technology, including safety and new products. For information about the next directional boring seminar, contact your Ditch Witch dealer.

FOREWORD

This manual is an important part of your equipment. It provides safety information and operation instructions to help you use and maintain your Ditch Witch equipment.

Read this manual before using your equipment. Keep it with the equipment at all times for future reference. If you sell your equipment, be sure to give this manual to the new owner.

If you need a replacement copy, contact your Ditch Witch dealer. If you need assistance in locating a dealer, write to the following address:

The Charles Machine Works, Inc.
PO Box 66
Perry, OK 73077-0066
USA

The descriptions and specifications in this manual are subject to change. The Charles Machine Works, Inc. reserves the right to improve equipment. Some product improvements may have taken place after this manual was published. For the latest information on Ditch Witch equipment, see your Ditch Witch dealer.

Thank you for buying and using Ditch Witch equipment.

FOREWORD

This manual is an important part of your equipment. It provides safety information and operation instructions to help you use and maintain your Ditch Witch equipment.

Read this manual before using your equipment. Keep it with the equipment at all times for future reference. If you sell your equipment, be sure to give this manual to the new owner.

If you need a replacement copy, contact your Ditch Witch dealer. If you need assistance in locating a dealer, write to the following address:

The Charles Machine Works, Inc.
PO Box 66
Perry, OK 73077-0066
USA

The descriptions and specifications in this manual are subject to change. The Charles Machine Works, Inc. reserves the right to improve equipment. Some product improvements may have taken place after this manual was published. For the latest information on Ditch Witch equipment, see your Ditch Witch dealer.

Thank you for buying and using Ditch Witch equipment.

Operator's Manual

1220 Trencher

Issue Number 1/OP-12/94.

Part Number 054-493.

Copyright 1994,
by The Charles Machine Works, Inc.,
Perry, Oklahoma, 73077-0066.

▲ Ditch Witch, AutoCrowd, Jet Trac, Modularmatic, Sidekick, Perma-Soil, Pro Tech, Roto Witch and Subsite are registered trademarks of The Charles Machine Works, Inc.

Pierce Airrow is a registered trademark of Oklahoma Airrow, Inc.

Operator's Manual

1220 Trencher

Issue Number 1/OP-12/94.

Part Number 054-493.

Copyright 1994,
by The Charles Machine Works, Inc.,
Perry, Oklahoma, 73077-0066.

▲ Ditch Witch, AutoCrowd, Jet Trac, Modularmatic, Sidekick, Perma-Soil, Pro Tech, Roto Witch and Subsite are registered trademarks of The Charles Machine Works, Inc.

Pierce Airrow is a registered trademark of Oklahoma Airrow, Inc.

Page 4 1220 Trencher - FOREWORD

TABLE OF CONTENTS

SERVICE SUPPORT 1

Serial Number Record 1

Service Support Procedure 2

Related Services 2

FOREWORD 3

GENERAL INFORMATION 7

CONTROLS 9

Control Panel 9

Operator Presence Switch 10

Axle Lock (Blue) 10

Boom Control (Green) 10

Digging Chain Control (Yellow) 10

Speed/Direction Control (Orange) 11

Hydraulic Pump Control (Orange) 11

Throttle (Black) 11

Engine Controls 12

SAFETY 15

Underground Hazards 16

Emergency Procedures 17

If an Electric Line Is Cut 17

If a Gas Line Is Cut 17

TABLE OF CONTENTS

SERVICE SUPPORT 1

Serial Number Record 1

Service Support Procedure 2

Related Services 2

FOREWORD 3

GENERAL INFORMATION 7

CONTROLS 9

Control Panel 9

Operator Presence Switch 10

Axle Lock (Blue) 10

Boom Control (Green) 10

Digging Chain Control (Yellow) 10

Speed/Direction Control (Orange) 11

Hydraulic Pump Control (Orange) 11

Throttle (Black) 11

Engine Controls 12

SAFETY 15

Underground Hazards 16

Emergency Procedures 17

If an Electric Line Is Cut 17

If a Gas Line Is Cut 17

Safety Alert Classifications 18
Safety Alerts 19

TRANSPORTATION 21
Lifting 21
Hauling 22
Loading 22

OPERATION 25
Inspect Machine 25
Start Engine 26
Drive 28
Trench 29

LUBRICATION AND MAINTENANCE 33

SPECIFICATIONS 41

WARRANTY

Safety Alert Classifications 18
Safety Alerts 19

TRANSPORTATION 21
Lifting 21
Hauling 22
Loading 22

OPERATION 25
Inspect Machine 25
Start Engine 26
Drive 28
Trench 29

LUBRICATION AND MAINTENANCE 33

SPECIFICATIONS 41

WARRANTY

GENERAL INFORMATION

The Ditch Witch 1220 handlebar trencher is designed for easy, efficient use.

Color-coded controls are in easy reach of the operator. The compact body fits through gates and goes where bigger trenchers cannot. The machine is balanced for easy jobsite maneuvering. Two digging boom lengths (24- and 30- inch) and chain options make the machine flexible enough for any soil conditions. Axle lock aids smooth, easy turns and straight trenching.

A. Trail wheel
B. Digging boom and chain
C. Engine
D. Control Panel/operator position

1220 Trencher - GENERAL INFORMATION Page 7

GENERAL INFORMATION

The Ditch Witch 1220 handlebar trencher is designed for easy, efficient use.

Color-coded controls are in easy reach of the operator. The compact body fits through gates and goes where bigger trenchers cannot. The machine is balanced for easy jobsite maneuvering. Two digging boom lengths (24- and 30- inch) and chain options make the machine flexible enough for any soil conditions. Axle lock aids smooth, easy turns and straight trenching.

A. Trail wheel
B. Digging boom and chain
C. Engine
D. Control Panel/operator position

CONTROLS

CONTROL PANEL

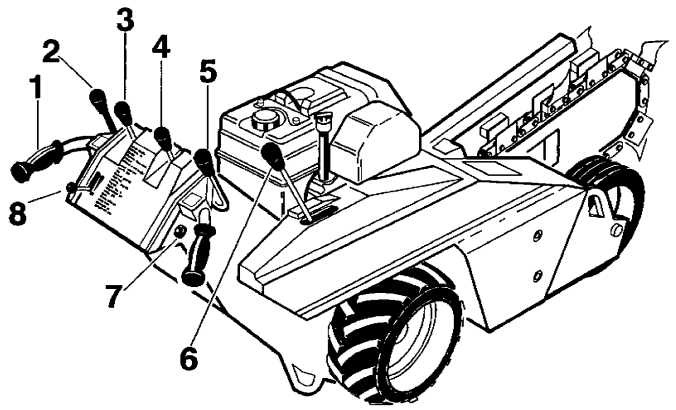

1. Operator presence switch
2. Axle lock (blue)
3. Boom control (green)
4. Speed/direction control (orange)
5. Digging chain control (yellow)
6. Hydraulic pump control (orange)
7. Ignition switch
8. Throttle (black)

CONTROLS

CONTROL PANEL

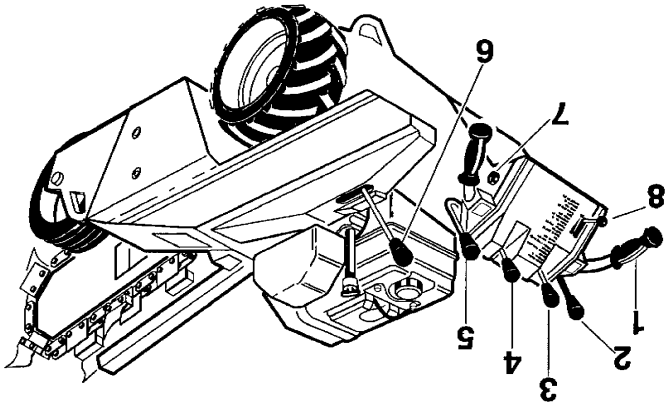

1. Operator presence switch
2. Axle lock (blue)
3. Boom control (green)
4. Speed/direction control (orange)
5. Digging chain control (yellow)
6. Hydraulic pump control (orange)
7. Ignition switch
8. Throttle (black)

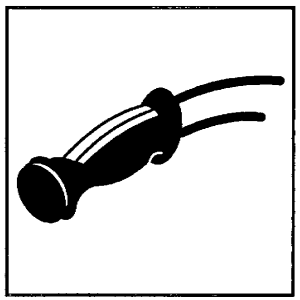

Operator Presence Switch

Prevents machine from running when digging or driving unless operator is holding at least one handgrip.

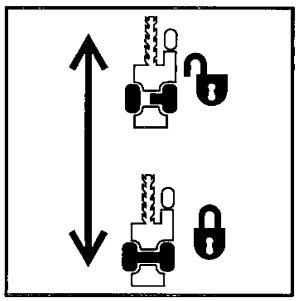

Axle Lock (Blue)

Locks axle (two-wheel drive) or unlocks axle (one-wheel drive).

- Push to unlock axle. Use unlocked axle to turn trencher.
- Pull to lock axle. Use locked axle for straight trenching.

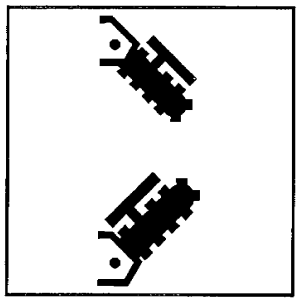

Boom Control (Green)

Raises or lowers digging boom. Can be used only when engine is running.

- Push to lower boom.
- Pull to raise boom.

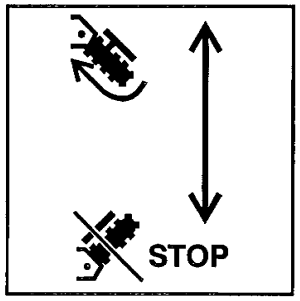

Digging Chain Control (Yellow)

Controls digging chain action and speed.

- Push to start digging chain.
- Pull to stop or slow digging chain.

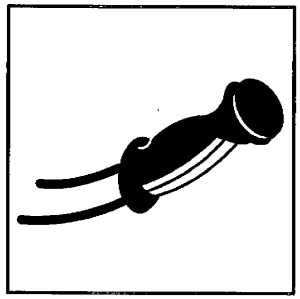

Operator Presence Switch

Prevents machine from running when digging or driving unless operator is holding at least one handgrip.

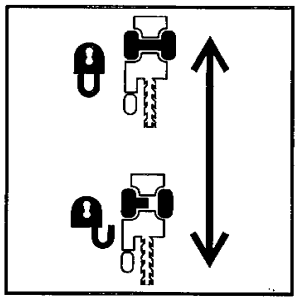

Axle Lock (Blue)

Locks axle (two-wheel drive) or unlocks axle (one-wheel drive).

- Push to unlock axle. Use unlocked axle to turn trencher.
- Pull to lock axle. Use locked axle for straight trenching.

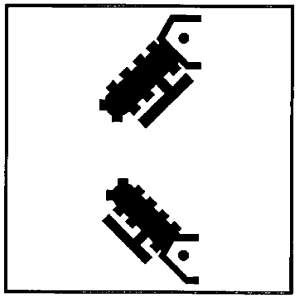

Boom Control (Green)

Raises or lowers digging boom. Can be used only when engine is running.

- Push to lower boom.
- Pull to raise boom.

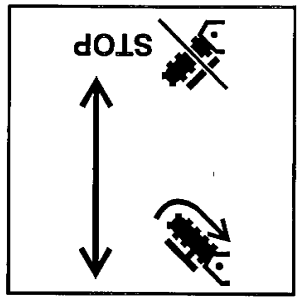

Digging Chain Control (Yellow)

Controls digging chain action and speed.

- Push to start digging chain.
- Pull to stop or slow digging chain.

Speed/Direction Control (Orange)

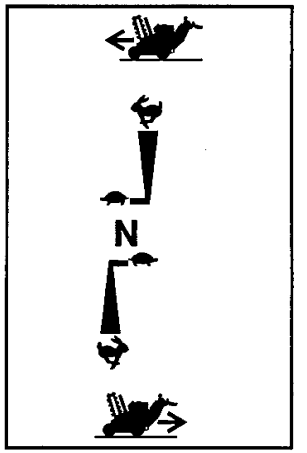

Controls unit speed and direction.

- Push to move toward digging boom.
- Pull to move toward operator position.
- To go faster in either direction, move control farther from center (neutral) position.
- To stop, return to neutral position.

Hydraulic Pump Control (Orange)

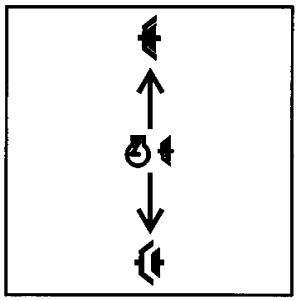

Used to help start cold engine.

- Push to engage.
- Pull to disengage.

Throttle (Black)

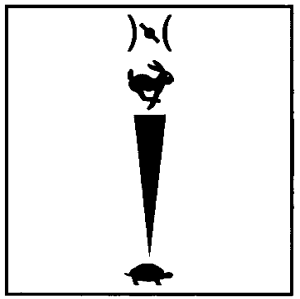

Controls engine speed.

- Push to speed engine.
- Pull to slow engine speed.

Speed/Direction Control (Orange)
Controls unit speed and direction.
- Push to move toward digging boom.
- Pull to move toward operator position.
- To go faster in either direction, move control farther from center (neutral) position.
- To stop, return to neutral position.

Hydraulic Pump Control (Orange)
Used to help start cold engine.
- Push to engage.
- Pull to disengage.

Throttle (Black)
Controls engine speed.
- Push to speed engine.
- Pull to slow engine speed.

ENGINE CONTROLS

Honda

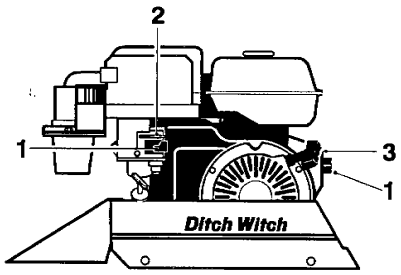

1. Fuel shut-off valves
2. Choke
3. Pull start

Fuel Shut-off Valves

Separate fuel reservoir from engine. Honda engine has two shut-off valves.

Choke

Regulates amount of fuel flowing from reservoir to engine.

Pull Start

Cranks engine for starting.

Honda

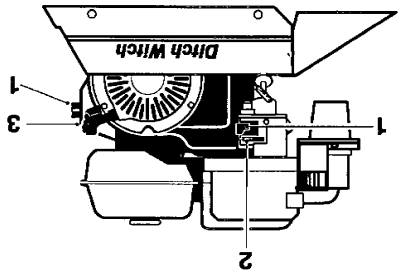

1. Fuel shut-off valves
2. Choke
3. Pull start

Fuel Shut-off Valves

Separate fuel reservoir from engine. Honda engine has two shut-off valves.

Choke

Regulates amount of fuel flowing from reservoir to engine.

Pull Start

Cranks engine for starting.

Kohler

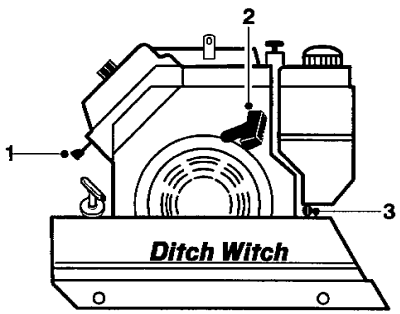

1. Choke
2. Pull start
3. Fuel shut-off valve

Choke

Regulates amount of fuel flowing from reservoir to engine.

Pull Start

Cranks engine for starting.

Fuel Shut-off Valve

Separates fuel reservoir from engine.

Kohler

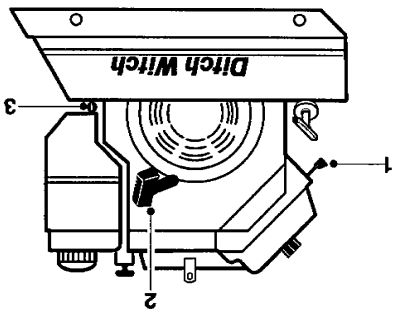

1. Choke
2. Pull start
3. Fuel shut-off valve

Choke

Regulates amount of fuel flowing from reservoir to engine.

Pull Start

Cranks engine for starting.

Fuel Shut-off Valve

Separates fuel reservoir from engine.

ENGINE CONTROLS
1220 Trencher - CONTROLS
Page 14

SAFETY

This section outlines basic safety procedures for using and maintaining your Ditch Witch equipment. Read this entire section before using your equipment.

⚠ This safety alert symbol appears in this book and on the machine. When you see this sign, carefully read and follow what it says. YOUR SAFETY IS AT STAKE.

Follow these guidelines before operating any jobsite equipment:

- Read and follow all safety precautions.
- Do not operate any equipment unless you have completed proper training and read operator's manual.
- Contact your local One-Call or utility company. Have all underground lines and cables located and marked before operating equipment. If you damage a utility, contact utility company.
- Classify jobsite based on its hazards and use correct equipment, safety equipment, and work methods for jobsite.
- Mark jobsite clearly and keep spectators away.
- Wear personal protective gear.
- Before operating equipment, review jobsite hazards, safety and emergency procedures, and individual responsibilities with all personnel.
- Replace missing or damaged safety shields and safety signs.
- Use equipment carefully. Stop operation and investigate anything that does not look or feel right.
- Contact your Ditch Witch dealer if you have any question about operation, maintenance, or equipment use.

SAFETY

This section outlines basic safety procedures for using and maintaining your Ditch Witch equipment. Read this entire section before using your equipment.

⚠ This safety alert symbol appears in this book and on the machine. When you see this sign, carefully read and follow what it says. YOUR SAFETY IS AT STAKE.

Follow these guidelines before operating any jobsite equipment:

- Read and follow all safety precautions.
- Do not operate any equipment unless you have completed proper training and read operator's manual.
- Contact your local One-Call or utility company. Have all underground lines and cables located and marked before operating equipment. If you damage a utility, contact utility company.
- Classify jobsite based on its hazards and use correct equipment, safety equipment, and work methods for jobsite.
- Mark jobsite clearly and keep spectators away.
- Wear personal protective gear.
- Before operating equipment, review jobsite hazards, safety and emergency procedures, and individual responsibilities with all personnel.
- Replace missing or damaged safety shields and safety signs.
- Use equipment carefully. Stop operation and investigate anything that does not look or feel right.
- Contact your Ditch Witch dealer if you have any question about operation, maintenance, or equipment use.

UNDERGROUND HAZARDS

Striking underground hazards can cause explosion, electrocution, fire, and exposure to hazardous materials.

Hazards include:

- Electric cables
- Natural gas lines
- Fiber optic cables
- Water lines
- Sewer lines
- Pipes carrying other chemicals, liquids, or gases
- Storage tanks

UNDERGROUND HAZARDS

Striking underground hazards can cause explosion, electrocution, fire, and exposure to hazardous materials.

Hazards include:

- Electric cables
- Natural gas lines
- Fiber optic cables
- Water lines
- Sewer lines
- Pipes carrying other chemicals, liquids, or gases
- Storage tanks

EMERGENCY PROCEDURES

IF AN ELECTRIC LINE IS CUT

1. DO NOT MOVE. Stay where you are and do not touch any equipment.
2. Warn others that an electric line has been hit and that they should stay away.
3. Have someone contact utility company.
4. Do not return to area until given permission by utility company.

IF A GAS LINE IS CUT

1. Immediately shut off engines.
2. LEAVE AREA as quickly as possible.
3. Warn others that a gas line has been hit and that they should leave the area.
4. Contact emergency personnel.
5. Contact utility company.
6. Do not return to area until given permission by utility company.

EMERGENCY PROCEDURES

IF AN ELECTRIC LINE IS CUT

1. DO NOT MOVE. Stay where you are and do not touch any equipment.
2. Warn others that an electric line has been hit and that they should stay away.
3. Have someone contact utility company.
4. Do not return to area until given permission by utility company.

IF A GAS LINE IS CUT

1. Immediately shut off engines.
2. LEAVE AREA as quickly as possible.
3. Warn others that a gas line has been hit and that they should leave the area.
4. Contact emergency personnel.
5. Contact utility company.
6. Do not return to area until given permission by utility company.

1220 Trencher - SAFETY
EMERGENCY PROCEDURES
Page **17**

SAFETY ALERT CLASSIFICATIONS

You will see the safety alert symbol with these words:

⚠ DANGER indicates an imminently hazardous situation which, if not avoided, will result in death or serious injury.

⚠ WARNING indicates a potentially hazardous situation which, if not avoided, could result in death or serious injury.

⚠ CAUTION indicates a potentially hazardous situation which, if not avoided, may result in minor or moderate injury.

In this book, you should look for two other words: **NOTICE** and **IMPORTANT**.

NOTICE can keep you from doing something that might damage the machine or someone's property. It may also be used to alert against unsafe practices.

IMPORTANT can help you do a better job or make your job easier in some way.

Page 18
1220 Trencher - SAFETY
SAFETY ALERT CLASSIFICATIONS

SAFETY ALERT CLASSIFICATIONS

You will see the safety alert symbol with these words:

⚠ DANGER indicates an imminently hazardous situation which, if not avoided, will result in death or serious injury.

⚠ WARNING indicates a potentially hazardous situation which, if not avoided, could result in death or serious injury.

⚠ CAUTION indicates a potentially hazardous situation which, if not avoided, may result in minor or moderate injury.

In this book, you should look for two other words: **NOTICE** and **IMPORTANT**.

NOTICE can keep you from doing something that might damage the machine or someone's property. It may also be used to alert against unsafe practices.

IMPORTANT can help you do a better job or make your job easier in some way.

SAFETY ALERTS

⚠ DANGER Deadly gases. Lack of oxygen or presence of gas will cause sickness or death. Provide ventilation.

⚠ DANGER Moving digging teeth will kill you or cut off arm or leg. Stay away.

NOTICE: Keep everyone at least 6' (2m) away from equipment while operating.

⚠ DANGER Electrical shock. Contacting electrical lines will cause death or serious injury. Know location of lines and stay away.

⚠ WARNING Crushing weight. If load falls or moves, it could kill or crush you. Use proper procedures and equipment or stay away.

⚠ WARNING Runaway possible. Machine could run over you or others. Learn how to use all controls. Start and operate only from operator's position.

SAFETY ALERTS

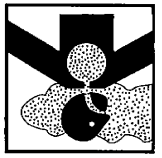

⚠ DANGER Deadly gases. Lack of oxygen or presence of gas will cause sickness or death. Provide ventilation.

⚠ DANGER Moving digging teeth will kill you or cut off arm or leg. Stay away.

NOTICE: Keep everyone at least 6' (2m) away from equipment while operating.

⚠ DANGER Electrical shock. Contacting electrical lines will cause death or serious injury. Know location of lines and stay away.

⚠ WARNING Crushing weight. If load falls or moves, it could kill or crush you. Use proper procedures and equipment or stay away.

⚠ WARNING Runaway possible. Machine could run over you or others. Learn how to use all controls. Start and operate only from operator's position.

WARNING Improper control function could cause death or serious injury. If control does not work as described in instructions, stop machine and have it repaired.

NOTICES:

- If interlock system does not work, contact Ditch Witch dealer. Improper repair may allow machine to start or operate with control in wrong position.
- Do not wire or tape operator's presence switch.

WARNING Incorrect procedures could result in death, injury, or property damage. Learn to use equipment correctly.

NOTICES:

- Keep attachments low when operating on slope. Drive slowly and cautiously at all times.
- Machine may move when chain starts to dig. Allow 3 ' (1m) between end of chain and obstacle.
- Digging chain on top side of boom can catch on root or rock, forcing handlebars downward suddenly. Stand back from console and hold handlebars loosely.

Page 20
1220 Trencher - SAFETY
SAFETY ALERTS

WARNING Improper control function could cause death or serious injury. If control does not work as described in instructions, stop machine and have it repaired.

NOTICES:

- If interlock system does not work, contact Ditch Witch dealer. Improper repair may allow machine to start or operate with control in wrong position.
- Do not wire or tape operator's presence switch.

WARNING Incorrect procedures could result in death, injury, or property damage. Learn to use equipment correctly.

NOTICES:

- Keep attachments low when operating on slope. Drive slowly and cautiously at all times.
- Machine may move when chain starts to dig. Allow 3 ' (1m) between end of chain and obstacle.
- Digging chain on top side of boom can catch on root or rock, forcing handlebars downward suddenly. Stand back from console and hold handlebars loosely.

TRANSPORTATION

LIFTING

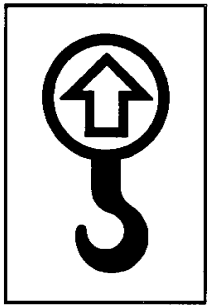

Lifting Points

Lifting points are identified by lifting decals. Lifting at any other point is unsafe and can damage machinery.

Lifting Boring Unit

Before lifting, check "Specifications" section. Use a crane capable of supporting the equipment's size and weight.

Lift trencher by running sling through front guide and around each handlebar.

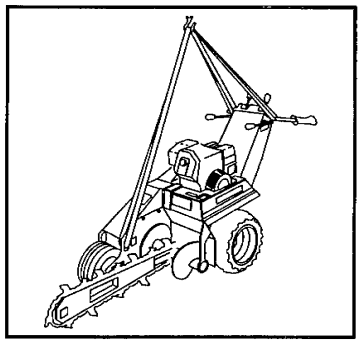

WARNING Crushing weight. If load falls or moves, it could kill or crush you. Use proper procedures and equipment or stay away.

TRANSPORTATION

LIFTING

Lifting Points

Lifting points are identified by lifting decals. Lifting at any other point is unsafe and can damage machinery.

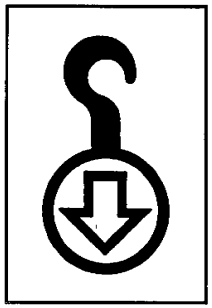

Lifting Boring Unit

Before lifting, check "Specifications" section. Use a crane capable of supporting the equipment's size and weight.

Lift trencher by running sling through front guide and around each handlebar.

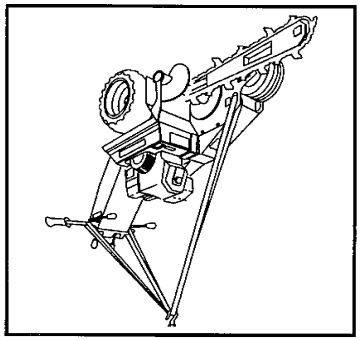

WARNING Crushing weight. If load falls or moves, it could kill or crush you. Use proper procedures and equipment or stay away.

HAULING

The 1220 trencher can be hauled in bed of 1/2 ton truck or by trailer. Before hauling check the following:

- Load and unload on level ground.
- Check that loading ramps will support weight (See "Specifications" section).
- Check that adequate tiedowns are available.

LOADING

Start Machine

1. Disengage pump control (orange).
2. Check that speed/direction control is in neutral position.
3. Check that digging chain control (yellow) is at STOP.
4. Open fuel shut-off valves.
   - Honda engine has two shut-off valves.
   - Kohler engine has one shut-off valve.
5. Choke cold engine.
6. Push throttle (black) to 1/4 open.
7. Turn key to on position.
8. Pull rope start.
9. Engage pump control (orange) slowly.
10. Idle engine 3-5 minutes before moving. Engine will idle with digging chain disengaged and speed/direction control in neutral position.

HAULING
1220 Trencher - TRANSPORTATION
Page 22

HAULING

The 1220 trencher can be hauled in bed of 1/2 ton truck or by trailer. Before hauling check the following:

- Load and unload on level ground.
- Check that loading ramps will support weight (See "Specifications" section).
- Check that adequate tiedowns are available.

LOADING

Start Machine

1. Disengage pump control (orange).
2. Check that speed/direction control is in neutral position.
3. Check that digging chain control (yellow) is at STOP.
4. Open fuel shut-off valves.
   - Honda engine has two shut-off valves.
   - Kohler engine has one shut-off valve.
5. Choke cold engine.
6. Push throttle (black) to 1/4 open.
7. Turn key to on position.
8. Pull rope start.
9. Engage pump control (orange) slowly.
10. Idle engine 3-5 minutes before moving. Engine will idle with digging chain disengaged and speed/direction control in neutral position.

Load Machine

1. Pull boom control (green) to raise boom.
2. Engage axle lock (blue).
3. Push throttle (black) to 3/4 open.

   IMPORTANT: Keep hand on one handlebar grip or machine will not run.

   EMERGENCY STOP: Release handlebar grip.

4. Move speed/direction control (orange) to forward or reverse position.

   To steer, disengage axle lock (blue), push handlebars down and turn machine.

5. Align trencher with ramps or trailer.
6. Guide trencher onto trailer or truck bed.
7. When tiedown position is reached, move speed/direction control (orange) to neutral position.
8. Push boom control (green) to lower boom.
9. Turn key to off position.
10. Tiedown trencher to trailer or truck bed.

1220 Trencher - TRANSPORTATION
LOADING
Page **23**

Load Machine

1. Pull boom control (green) to raise boom.
2. Engage axle lock (blue).
3. Push throttle (black) to 3/4 open.

   IMPORTANT: Keep hand on one handlebar grip or machine will not run.

   EMERGENCY STOP: Release handlebar grip.

4. Move speed/direction control (orange) to forward or reverse position.

   To steer, disengage axle lock (blue), push handlebars down and turn machine.

5. Align trencher with ramps or trailer.
6. Guide trencher onto trailer or truck bed.
7. When tiedown position is reached, move speed/direction control (orange) to neutral position.
8. Push boom control (green) to lower boom.
9. Turn key to off position.
10. Tiedown trencher to trailer or truck bed.

Unload Machine

1. Remove tiedowns from trencher.
2. Start machine.
3. Move throttle (black) to 1/4 open.
4. Engage axle lock (blue).
5. Pull boom control (green) to raise boom.
6. Use speed/direction control (orange) to slowly back trencher off trailer or down ramps.

Page 24 1220 Trencher - TRANSPORTATION
LOADING

Unload Machine

1. Remove tiedowns from trencher.
2. Start machine.
3. Move throttle (black) to 1/4 open.
4. Engage axle lock (blue).
5. Pull boom control (green) to raise boom.
6. Use speed/direction control (orange) to slowly back trencher off trailer or down ramps.

OPERATION

INSPECT MACHINE

For safe and efficient use of your machine, check the following before each day's work. Refer to "Lubrication and Maintenance" section for additional information.

- General appearance.
- Condition of digging chain, teeth, drive belts, and air filter.
- Fuel lines and fittings for signs of leakage, wear, or other damage.
- Tire pressure. Use reliable tire pressure gauge.
- Engine oil level. Keep oil level at highest line on dipstick.
- Hydraulic oil level. Keep oil level approximately halfway up sight glass.
- Fuel level. Fill tank at end of day to reduce condensation.
- Signs are in place and readable.
- Guards and shields are in place.
- Nuts and bolts are tight. Tighten as specified in torque tables in "Parts Manual."

1220 Trencher - OPERATION
INSPECT MACHINE
Page 25

OPERATION

INSPECT MACHINE

For safe and efficient use of your machine, check the following before each day's work. Refer to "Lubrication and Maintenance" section for additional information.

- General appearance.
- Condition of digging chain, teeth, drive belts, and air filter.
- Fuel lines and fittings for signs of leakage, wear, or other damage.
- Tire pressure. Use reliable tire pressure gauge.
- Engine oil level. Keep oil level at highest line on dipstick.
- Hydraulic oil level. Keep oil level approximately halfway up sight glass.
- Fuel level. Fill tank at end of day to reduce condensation.
- Signs are in place and readable.
- Guards and shields are in place.
- Nuts and bolts are tight. Tighten as specified in torque tables in "Parts Manual."

START ENGINE

⚠ DANGER Deadly gases. Lack of oxygen or presence of gas will cause sickness or death. Provide ventilation.

⚠ WARNING Incorrect procedures could result in death, injury, or property damage. Learn to use equipment correctly.

IMPORTANT: Read engine manufacturer's starting and operating instructions. Follow directions for new engine break-in.

1. Disengage pump control (orange).
2. Check that speed/direction control (orange) is in neutral position.
3. Pull digging chain control (yellow) to STOP.
4. Open fuel shut-off valves.
   - Honda engine has two shut-off valves.
   - Kohler engine has one shut-off valve.
5. Choke cold engine.
6. Push throttle (black) to 1/4 open.
7. Turn key to on position.

Page 26 1220 Trencher - OPERATION
START ENGINE

START ENGINE

⚠ DANGER Deadly gases. Lack of oxygen or presence of gas will cause sickness or death. Provide ventilation.

⚠ WARNING Incorrect procedures could result in death, injury, or property damage. Learn to use equipment correctly.

IMPORTANT: Read engine manufacturer's starting and operating instructions. Follow directions for new engine break-in.

1. Disengage pump control (orange).
2. Check that speed/direction control (orange) is in neutral position.
3. Pull digging chain control (yellow) to STOP.
4. Open fuel shut-off valves.
   - Honda engine has two shut-off valves.
   - Kohler engine has one shut-off valve.
5. Choke cold engine.
6. Push throttle (black) to 1/4 open.
7. Turn key to on position.

8. Pull rope start.

   If engine does not start after three pulls on rope start, turn ignition off and check for fuel blockage or ignition system problems.

9. Engage pump control (orange) slowly.
10. Idle engine 3-5 minutes before moving. Engine will idle with digging chain disengaged and speed/direction control in neutral position.
11. Check controls for correct operation.

⚠WARNING Improper control function could cause death or serious injury. If control does not work as described in instructions, stop machine and have it repaired.

NOTICES:

- If interlock system does not work, contact Ditch Witch dealer. Improper repair may allow machine to start or operate with control in wrong position.
- Do not wire or tape operator presence switch.

1220 Trencher - OPERATION
START ENGINE
Page ***27***

8. Pull rope start.

   If engine does not start after three pulls on rope start, turn ignition off and check for fuel blockage or ignition system problems.

9. Engage pump control (orange) slowly.
10. Idle engine 3-5 minutes before moving. Engine will idle with digging chain disengaged and speed/direction control in neutral position.
11. Check controls for correct operation.

⚠WARNING Improper control function could cause death or serious injury. If control does not work as described in instructions, stop machine and have it repaired.

NOTICES:

- If interlock system does not work, contact Ditch Witch dealer. Improper repair may allow machine to start or operate with control in wrong position.
- Do not wire or tape operator presence switch.

DRIVE

⚠ WARNING Incorrect procedures could result in death, injury, or property damage. Learn to use equipment correctly.

NOTICE: Keep attachments low when operating on slope. Drive slowly and cautiously at all times.

IMPORTANT: Keep hand on one handlebar grip or machine will not run.

1. Raise or lower boom.
   - Pull boom control (green) to raise boom.
   - In rough terrain, push boom control (green) to lower boom.
2. Engage or disengage axle lock.
   - On level ground, pull axle lock (blue) to engage.
   - In rough terrain, push axle lock (blue) to disengage.
3. Push throttle (black) to 3/4 open.
4. Move speed/direction control (orange) to or reverse position.
5. To steer, disengage axle lock, push handlebars down and turn machine.

DRIVE

⚠ WARNING Incorrect procedures could result in death, injury, or property damage. Learn to use equipment correctly.

NOTICE: Keep attachments low when operating on slope. Drive slowly and cautiously at all times.

IMPORTANT: Keep hand on one handlebar grip or machine will not run.

1. Raise or lower boom.
   - Pull boom control (green) to raise boom.
   - In rough terrain, push boom control (green) to lower boom.
2. Engage or disengage axle lock.
   - On level ground, pull axle lock (blue) to engage.
   - In rough terrain, push axle lock (blue) to disengage.
3. Push throttle (black) to 3/4 open.
4. Move speed/direction control (orange) to or reverse position.
5. To steer, disengage axle lock, push handlebars down and turn machine.

TRENCH

1. Move trencher to where trench should begin. To prevent machine creep, move speed/direction control (orange) to right side of neutral slot and pull back.
2. For straighter trench, pull axle lock (blue) to engage.
3. Push throttle (black) halfway.
4. Push boom control (green) until boom is 1" (25mm) from ground.

⚠ DANGER Moving digging teeth will kill you or cut off arm or leg. Stay away.

NOTICE: Keep everyone at least 6' (2m) away from equipment while operating.

⚠ DANGER Electrical shock. Contacting electrical lines will cause death or serious injury. Know location of lines and stay away.

5. Push digging chain control to start digging chain.

1220 Trencher - OPERATION
TRENCH
Page ***29***

TRENCH

1. Move trencher to where trench should begin. To prevent machine creep, move speed/direction control (orange) to right side of neutral slot and pull back.
2. For straighter trench, pull axle lock (blue) to engage.
3. Push throttle (black) halfway.
4. Push boom control (green) until boom is 1" (25mm) from ground.

⚠ DANGER Moving digging teeth will kill you or cut off arm or leg. Stay away.

NOTICE: Keep everyone at least 6' (2m) away from equipment while operating.

⚠ DANGER Electrical shock. Contacting electrical lines will cause death or serious injury. Know location of lines and stay away.

5. Push digging chain control to start digging chain.

6. Push boom control (green) slowly to lower digging chain to trench depth.

WARNING Incorrect procedures could result in death, injury, or property damage. Learn to use equipment correctly.

NOTICES:

- Machine may move when chain starts to dig. Allow 3' (1m) between end of chain and obstacle.
- Digging chain on top side of boom can catch on root or rock, forcing handlebars downward suddenly. Stand back from console and hold handlebars loosely.

7. When trench depth is reached, push throttle (black) to full engine speed.
8. Pull speed/direction control (orange). Trencher will move toward you.

   Trenching movement is toward you.

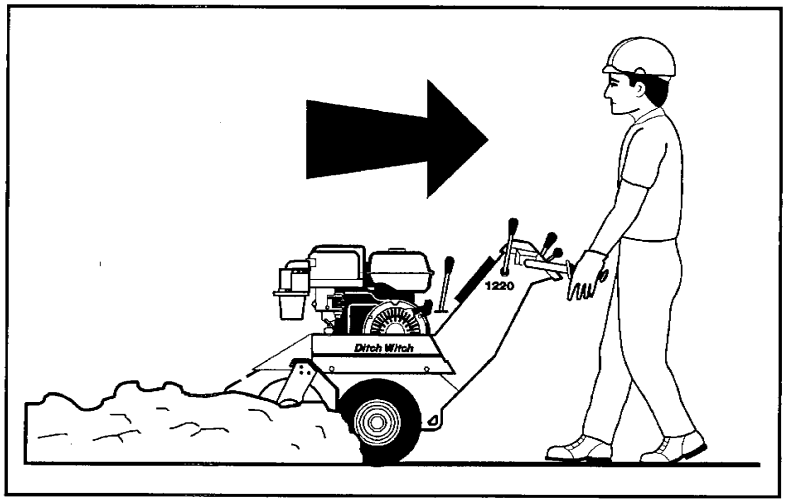

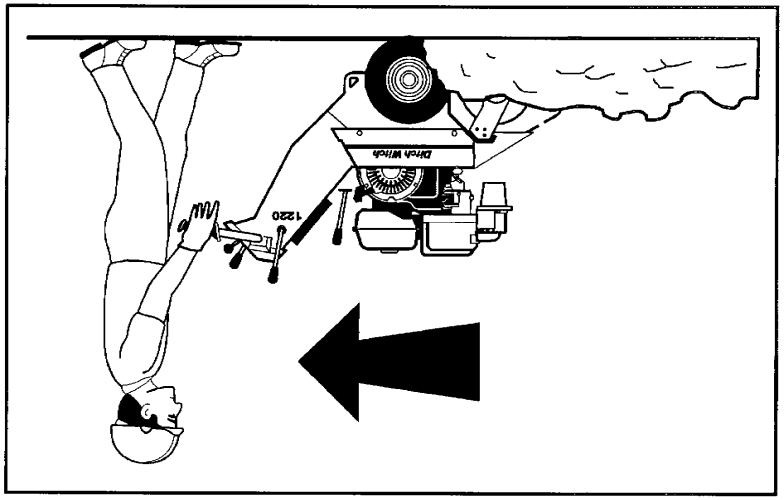

6. Push boom control (green) slowly to lower digging chain to trench depth.

WARNING Incorrect procedures could result in death, injury, or property damage. Learn to use equipment correctly.

NOTICES:

- Machine may move when chain starts to dig. Allow 3' (1m) between end of chain and obstacle.
- Digging chain on top side of boom can catch on root or rock, forcing handlebars downward suddenly. Stand back from console and hold handlebars loosely.

7. When trench depth is reached, push throttle (black) to full engine speed.
8. Pull speed/direction control (orange). Trencher will move toward you.

   Trenching movement is toward you.

Page 30 1220 Trencher - OPERATION
TRENCH

9. When trench is finished, move speed/direction control (orange) to neutral position.
10. Pull throttle (black) halfway back.
11. Raise boom (green) to top of trench.
12. Stop digging chain (yellow).
13. Raise boom (green) completely.
14. Use speed/direction control (orange) and axle lock (blue) to move trencher away from trench. Let engine idle a few minutes to cool, then turn ignition off.

1220 Trencher - OPERATION
TRENCH
Page **31**

9. When trench is finished, move speed/direction control (orange) to neutral position.
10. Pull throttle (black) halfway back.
11. Raise boom (green) to top of trench.
12. Stop digging chain (yellow).
13. Raise boom (green) completely.
14. Use speed/direction control (orange) and axle lock (blue) to move trencher away from trench. Let engine idle a few minutes to cool, then turn ignition off.

TRENCH
1220 Trencher - OPERATION
Page 32

LUBRICATION AND MAINTENANCE

Proper lubrication and maintenance protects Ditch Witch equipment from damage and failure.

Use only recommended lubricants. Fill to capacities listed in "Specifications" section.

Recommended Lubricants	
AGMA-7	Worm gear lubricant matching American Gear Manufacturer's Association Compound #7
GEO	Gasoline Engine Oil (see chart for appropriate SAE viscosity rating) meeting API service classification SD
MPG	Multipurpose grease
THF	Tractor hydraulic fluid, similar to Phillips 66 HG, Mobilfluid 432, Chevron tractor hydraulic fluid, Texaco TDH oil, or equivalent

⚠WARNING Incorrect procedures could result in death, injury, or property damage. Learn to use equipment correctly.

NOTICE: Unless otherwise instructed, all service in this section should be performed with engine shut off.

Refer to engine manufacturer's manual for engine maintenance instructions.

LUBRICATION AND MAINTENANCE

Proper lubrication and maintenance protects Ditch Witch equipment from damage and failure.

Use only recommended lubricants. Fill to capacities listed in "Specifications" section.

Recommended Lubricants	
AGMA-7	Worm gear lubricant matching American Gear Manufacturer's Association Compound #7
GEO	Gasoline Engine Oil (see chart for appropriate SAE viscosity rating) meeting API service classification SD
MPG	Multipurpose grease
THF	Tractor hydraulic fluid, similar to Phillips 66 HG, Mobilfluid 432, Chevron tractor hydraulic fluid, Texaco TDH oil, or equivalent

⚠WARNING Incorrect procedures could result in death, injury, or property damage. Learn to use equipment correctly.

NOTICE: Unless otherwise instructed, all service in this section should be performed with engine shut off.

Refer to engine manufacturer's manual for engine maintenance instructions.

LUBRICATION SCHEDULE

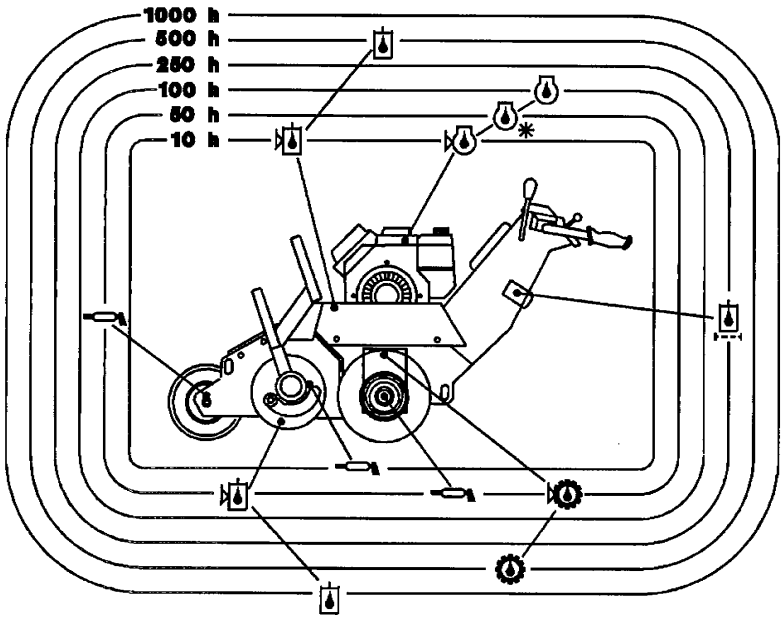

- Gasoline Engine Oil
- Multipurpose Grease
- Hydraulic Fluid Filter
- Hydraulic Fluid Level Check
- Tractor Hydraulic Fluid
- AGMA-7
- AGMA-7 Oil Level Check
- Engine Oil Level Check

LUBRICATION SCHEDULE

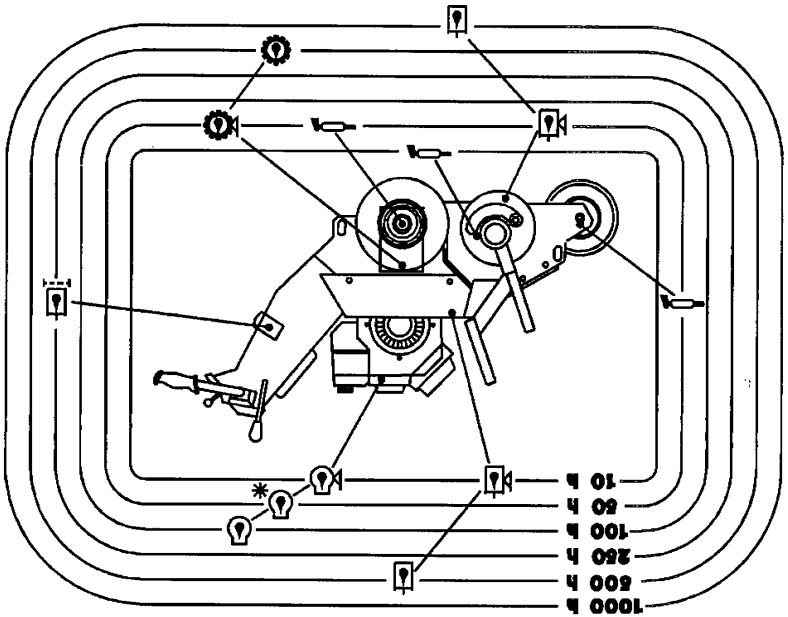

- Gasoline Engine Oil
- Multipurpose Grease
- Hydraulic Fluid Filter
- Hydraulic Fluid Level Check
- Tractor Hydraulic Fluid
- AGMA-7
- AGMA-7 Oil Level Check
- Engine Oil Level Check

MAINTENANCE SCHEDULE

Interval	Task	No. of Points
Each use	Check tire pressure	3
25 hours	Clean air filter (foam element)	1
100 hours	Change air filter (paper element)	1
As needed	Adjust digging chain	1
	Adjust drive belts	2
	Adjust digging chain clutch	1

Honda Engine

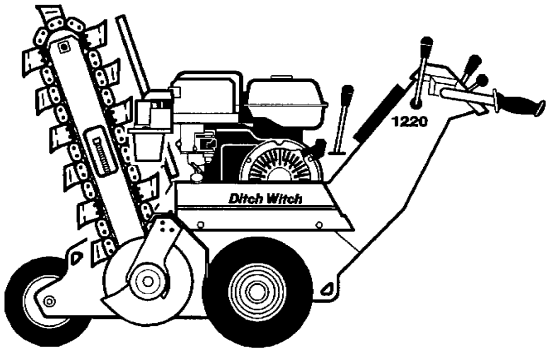

Kohler Engine

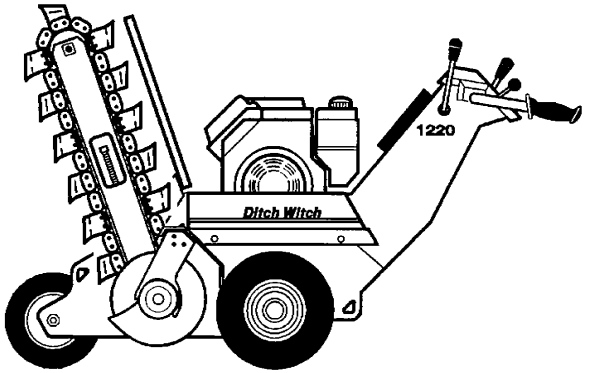

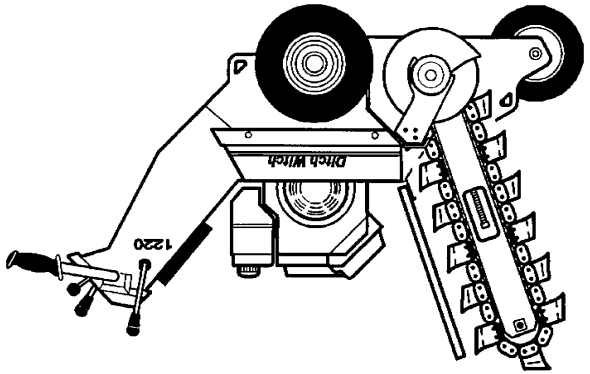

Kohler Engine

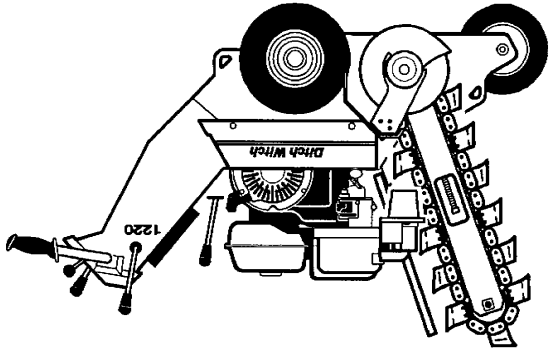

Honda Engine

MAINTENANCE SCHEDULE

Interval	Task	No. of Points
Each use	Check tire pressure	3
25 hours	Clean air filter (foam element)	1
100 hours	Change air filter (paper element)	1
As needed	Adjust digging chain	1
	Adjust drive belts	2
	Adjust digging chain clutch	1

Engine Oil

Check engine oil each use. Refill as needed.

Change engine oil every 100 hours with GEO.

Hydraulic Oil

Check hydraulic oil levers each use.

Level should be between marks on dipstick.

Change hydraulic filter every 250 hours.

Change hydraulic oil every 500 hours.

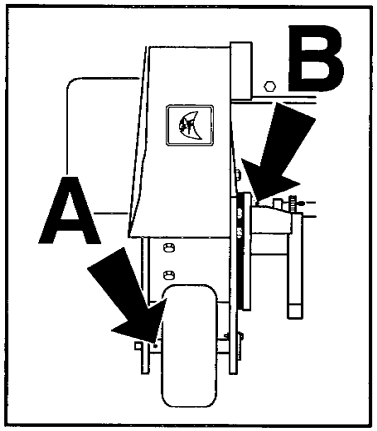

Tires

Lube trail wheel (A) every 25 hours with MPG.

Keep trail wheel pressure at 15 psi (103 kPa).

Pivot

Lube pivot (B) every 10 hours with MPG.

Page 36 1220 Trencher - LUBRICATION AND MAINTENANCE
MAINTENANCE SCHEDULE

Engine Oil

Check engine oil each use. Refill as needed.

Change engine oil every 100 hours with GEO.

Hydraulic Oil

Check hydraulic oil levers each use.

Level should be between marks on dipstick.

Change hydraulic filter every 250 hours.

Change hydraulic oil every 500 hours.

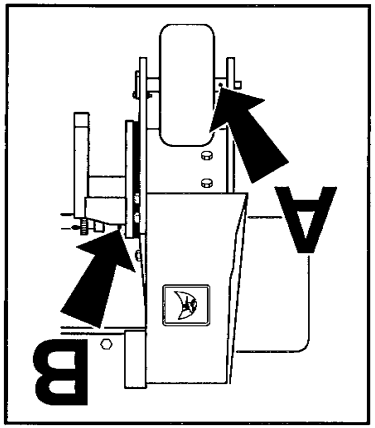

Tires

Lube trail wheel (A) every 25 hours with MPG.

Keep trail wheel pressure at 15 psi (103 kPa).

Pivot

Lube pivot (B) every 10 hours with MPG.

Axle Lock

Lube axle lock every 25 hours with MPG.

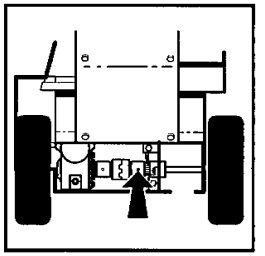

Gearbox

Check gearbox every 50 hours.

Oil should be at lever of fill plug.

Change gearbox oil every 1000 hours with THF.

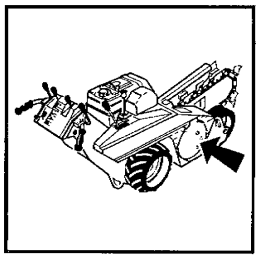

Worm Drive

Check worm drive every 50 hours.

Oil should be at level of fill plug (A).

Change worm drive oil every 500 hours with AGMA-7. Empty at drain (B). Do not use substitute lubricant.

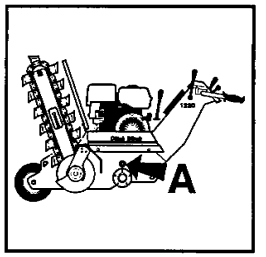

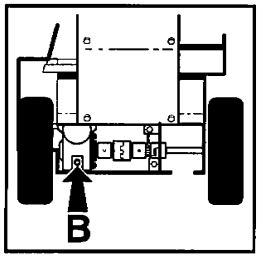

1220 Trencher - LUBRICATION AND MAINTENANCE
MAINTENANCE SCHEDULE
Page 37

Axle Lock

Lube axle lock every 25 hours with MPG.

Gearbox

Check gearbox every 50 hours.

Oil should be at lever of fill plug.

Change gearbox oil every 1000 hours with THF.

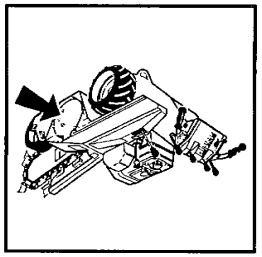

Worm Drive

Check worm drive every 50 hours.

Oil should be at level of fill plug (A).

Change worm drive oil every 500 hours with AGMA-7. Empty at drain (B). Do not use substitute lubricant.

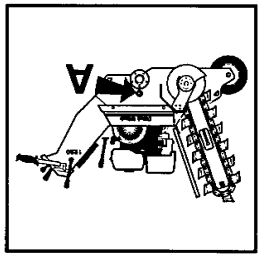

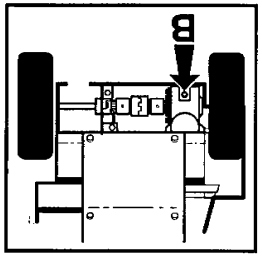

Air Filter

Change paper air filter element every 100 hours. Do not allow dirt to fall into carburetor.

Change foam air filter (Kohler engine only) every 25 hours.

- Clean with water and mild soap.
- Dry before replacing.
- Add lubricant and squeeze to distribute oil evenly.

Digging Chain

Digging chain is at proper adjustment when chain can be moved 1/2" up or down. To adjust digging chain:

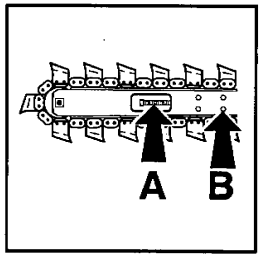

1. Loosen 4 clamp bolts (B) so boom slides freely.
2. Loosen jam nut (A) on adjustment screw.
3. Rotate adjustment screw in to tighten digging chain, out to loosen digging chain.
4. When proper adjustment is reached, tighten clamp bolts and jam nut.

Page 38 1220 Trencher - LUBRICATION AND MAINTENANCE
MAINTENANCE SCHEDULE

Air Filter

Change paper air filter element every 100 hours. Do not allow dirt to fall into carburetor.

Change foam air filter (Kohler engine only) every 25 hours.

- Clean with water and mild soap.
- Dry before replacing.
- Add lubricant and squeeze to distribute oil evenly.

Digging Chain

Digging chain is at proper adjustment when chain can be moved 1/2" up or down. To adjust digging chain:

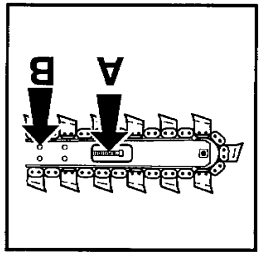

1. Loosen 4 clamp bolts (B) so boom slides freely.
2. Loosen jam nut (A) on adjustment screw.
3. Rotate adjustment screw in to tighten digging chain, out to loosen digging chain.
4. When proper adjustment is reached, tighten clamp bolts and jam nut.

Digging Chain Clutch

Check digging chain clutch regularly and adjust when needed.

1. Pull digging chain lever (yellow) back.
2. Remove engine cover.
3. Measure distance between idler and plate below idler. If distance is more than 3/8" (1cm), adjust clutch.
4. Loosen two bolts on frame bracket and move bracket forward until gap is 3/8" (1cm). Tighten bolts.
5. If gap is still more than 3/8", refer to "Repair Guide" instructions for shortening digging chain clutch at ball joint.

Drive Belts

Check drive belt regularly and adjust when needed.

1. Push digging chain lever (yellow) forward.
2. Pull hydraulic pump control (orange) back.
3. Measure digging chain clutch spring. Turn nuts on spring rod until spring is 3.5" (90 mm) long.
4. Check that belt retainers are 3/16" (5 mm) from belt. Do not remove retainers.

1220 Trencher - LUBRICATION AND MAINTENANCE
MAINTENANCE SCHEDULE
Page 39

Digging Chain Clutch
Check digging chain clutch regularly and adjust when needed.
1. Pull digging chain lever (yellow) back.
2. Remove engine cover.
3. Measure distance between idler and plate below idler. If distance is more than 3/8" (1cm), adjust clutch.
4. Loosen two bolts on frame bracket and move bracket forward until gap is 3/8" (1cm). Tighten bolts.
5. If gap is still more than 3/8", refer to "Repair Guide" instructions for shortening digging chain clutch at ball joint.
Drive Belts
Check drive belt regularly and adjust when needed.
1. Push digging chain lever (yellow) forward.
2. Pull hydraulic pump control (orange) back.
3. Measure digging chain clutch spring. Turn nuts on spring rod until spring is 3.5" (90 mm) long.
4. Check that belt retainers are 3/16" (5 mm) from belt. Do not remove retainers.

MAINTENANCE SCHEDULE
1220 Trencher - LUBRICATION AND MAINTENANCE Page 40

SPECIFICATIONS

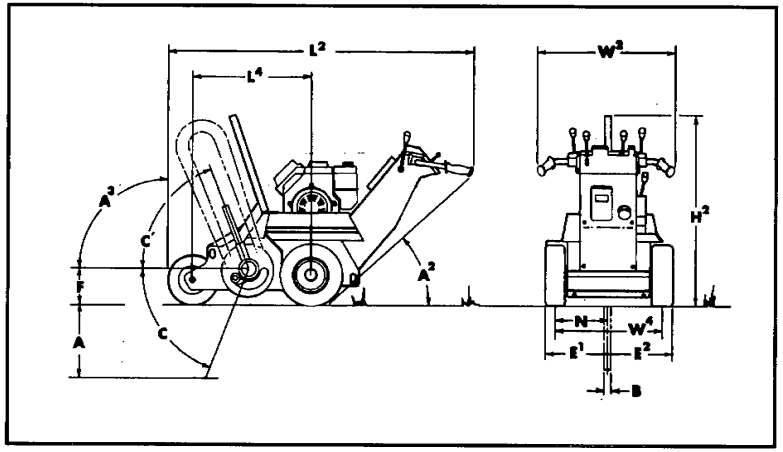

	Dimensional	U.S.	Metric
A	Trench depth, maximum	30"	760 mm
B	Trench width	3 1/4 - 6"	80-150 mm
C	Boom travel down	65°	65°
C'	Boom travel up	55°	55°
F	Headshaft height - digging chain	8.6"	220 mm
L^2	Length	78"	1981 mm
W^2	Width	32"	810 mm
H^2	Height	49"	1240 mm
W^4	Tread	26"	660 mm
A^3	Angle of departure	90°	90°
L^4	Wheelbase	32"	810 mm
E^1	Centerline trench to outside edge of machine, left	15.1"	380 mm
E^2	Centerline trench to outside edge of machine, right	16.9"	430 mm
N	Spoil discharge reach	10.6"	270 mm
A^2	Angle of approach	47°	47°
Dimensions based on 16x6.50x8 tires, 6" (152mm) pivot, and 24" (610mm) boom in transport position.			

SPECIFICATIONS

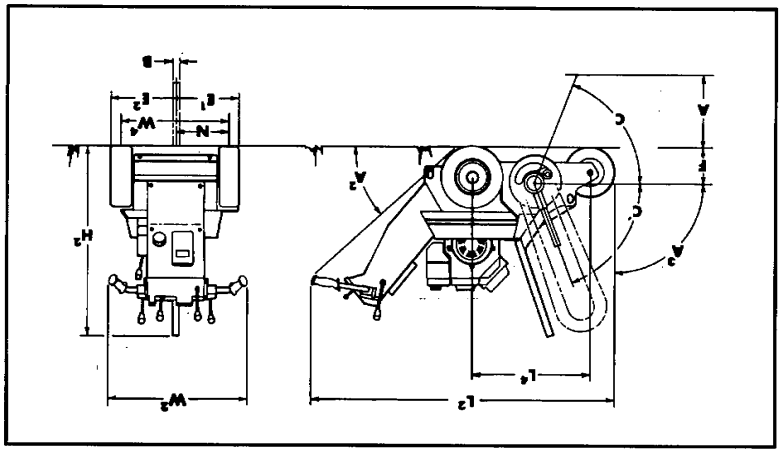

	Dimensional	U.S.	Metric
A	Trench depth, maximum	30"	760 mm
B	Trench width	3 1/4 - 6"	80-150 mm
C	Boom travel down	65°	65°
C'	Boom travel up	55°	55°
F	Headshaft height - digging chain	8.6"	220 mm
L^2	Length	78"	1981 mm
W^2	Width	32"	810 mm
H^2	Height	49"	1240 mm
W^4	Tread	26"	660 mm
A^3	Angle of departure	90°	90°
L^4	Wheelbase	32"	810 mm
E^1	Centerline trench to outside edge of machine, left	15.1"	380 mm
E^2	Centerline trench to outside edge of machine, right	16.9"	430 mm
N	Spoil discharge reach	10.6"	270 mm
A^2	Angle of approach	47°	47°
Dimensions based on 16x6.50x8 tires, 6" (152mm) pivot, and 24" (610mm) boom in transport position.			

1220 Trencher - SPECIFICATIONS Page 41

General		
Ditch Witch Model 1220, self-propelled, pedestrian, manually steered, two-wheel drive, rigid frame, chain-type trencher		
Operational	**U.S.**	**Metric**
Vehicle Speeds		
Maximum transit forward	160 fpm	49 mpm
Maximum transit reverse	135 fpm	42 mpm
Digging Chain Speed	276 fpm	84 mpm
Spoil handling - single, open end auger		
Outer diameter	12"	305 mm
Inner diameter	4"	102 mm
Length	9"	229 mm
Operating weight based on 33,000 lb (14,969kg) test, 2-pitch digging chain	780 lb	354 kg
Power - Honda GX390 Engine	**U.S.**	**Metric**
Fuel - gasoline		
Cooling medium - air		
Number of cylinders - one		
Displacement	23.7 in^3	389 cm^3
Bore	3.53"	90 mm
Stroke	2.52"	64 mm
Engine manufacturer's gross power rating at 3,600 rpm	13 Hp	8.2 kW
Maximum governed speed as installed (no load)	3400 rpm	3400 rpm
Flywheel power at 3200 rpm (full load)	10.5 Hp	7.5 kW
Fuel consumption at 3600 rpm	.51 gph	1.9 Lph
Maximum tilt angle	20°	20°
Fuel tank capacity	1.7 gal	6.5 L
Engine oil capacity	2.3 pt	1.1 L
Power - Kohler Command CH-12.5 Engine	U.S.	**Metric**
Fuel - gasoline		
Cooling Medium - air		
Number of Cylinders - one		
Displacement	24.3 in^3	398 cm^3
Bore	3.43"	87 mm
Stroke	2.64"	67 mm

General		
Ditch Witch Model 1220, self-propelled, pedestrian, manually steered, two-wheel drive, rigid frame, chain-type trencher		
Operational	**U.S.**	**Metric**
Vehicle Speeds		
Maximum transit forward	160 fpm	49 mpm
Maximum transit reverse	135 fpm	42 mpm
Digging Chain Speed	276 fpm	84 mpm
Spoil handling - single, open end auger		
Outer diameter	12"	305 mm
Inner diameter	4"	102 mm
Length	9"	229 mm
Operating weight based on 33,000 lb (14,969kg) test, 2-pitch digging chain	780 lb	354 kg
Power - Honda GX390 Engine	**U.S.**	**Metric**
Fuel - gasoline		
Cooling medium - air		
Number of cylinders - one		
Displacement	23.7 in^3	389 cm^3
Bore	3.53"	90 mm
Stroke	2.52"	64 mm
Engine manufacturer's gross power rating at 3,600 rpm	13 Hp	8.2 kW
Maximum governed speed as installed (no load)	3400 rpm	3400 rpm
Flywheel power at 3200 rpm (full load)	10.5 Hp	7.5 kW
Fuel consumption at 3600 rpm	.51 gph	1.9 Lph
Maximum tilt angle	20°	20°
Fuel tank capacity	1.7 gal	6.5 L
Engine oil capacity	2.3 pt	1.1 L
Power - Kohler Command CH-12.5 Engine	U.S.	**Metric**
Fuel - gasoline		
Cooling Medium - air		
Number of Cylinders - one		
Displacement	24.3 in^3	398 cm^3
Bore	3.43"	87 mm
Stroke	2.64"	67 mm

Engine manufacturer's gross power rating at 3600 rpm	12.5 Hp	9.3 kW
Maximum governed speed as installed (no load)	3400 rpm	3400 rpm
Flywheel power at 3200 rpm (full load)	11 Hp	8.2 kW
Fuel consumption at 3400 rpm	.95 gph	3.6 Lph
Maximum tilt angle	25°	25°
Fuel tank capacity	1.7 gal	6.4 L
Engine oil capacity	4 pt	1.9 L
Power Train		
Ground Drive Transmission		
Ground Drive - Hydrostatic, infinitely variable from zero to maximum, gearbox to axle, speed and direction controlled with single lever		
Clutch, Pump Drive - Mechanical, hand-operated, spring-loaded with tension roller for belt drive		
Clutch, Digging Chain - Mechanical, hand-operated, spring-loaded with tension roller for belt drive		
Tires		
Drive - standard: 16x6.50x8		
Drive - optional: 18x8.50x8		
Trail - 13x5.00x6		
Trencher Drive: Mechanical - Belt drive to reduction drive, headshaft		
Belt - "Power Band" - 2 groove		
Digging Chain - 33,000 lb (14,969 kg) test		
Chain Drive Sprocket - Forged and tempered		
Digging Teeth - Bolt-on cup teeth with hard surface edge of tungsten carbide		
Spoil Handling Drive - mechanical, attached to and rotates with headshaft		
Noise Levels		
Operator 89 dbA sound pressure per ISO 6394.		
Exterior 102 dbA sound power per ISO 6393.		
Vibration Levels		
Vibration at the operator's hand during normal operation is 6.1 m/s^2.		

Engine manufacturer's gross power rating at 3600 rpm	12.5 Hp	9.3 kW
Maximum governed speed as installed (no load)	3400 rpm	3400 rpm
Flywheel power at 3200 rpm (full load)	11 Hp	8.2 kW
Fuel consumption at 3400 rpm	.95 gph	3.6 Lph
Maximum tilt angle	25°	25°
Fuel tank capacity	1.7 gal	6.4 L
Engine oil capacity	4 pt	1.9 L
Power Train		
Ground Drive Transmission		
Ground Drive - Hydrostatic, infinitely variable from zero to maximum, gearbox to axle, speed and direction controlled with single lever		
Clutch, Pump Drive - Mechanical, hand-operated, spring-loaded with tension roller for belt drive		
Clutch, Digging Chain - Mechanical, hand-operated, spring-loaded with tension roller for belt drive		
Tires		
Drive - standard: 16x6.50x8		
Drive - optional: 18x8.50x8		
Trail - 13x5.00x6		
Trencher Drive: Mechanical - Belt drive to reduction drive, headshaft		
Belt - "Power Band" - 2 groove		
Digging Chain - 33,000 lb (14,969 kg) test		
Chain Drive Sprocket - Forged and tempered		
Digging Teeth - Bolt-on cup teeth with hard surface edge of tungsten carbide		
Spoil Handling Drive - mechanical, attached to and rotates with headshaft		
Noise Levels		
Operator 89 dbA sound pressure per ISO 6394.		
Exterior 102 dbA sound power per ISO 6393.		
Vibration Levels		
Vibration at the operator's hand during normal operation is 6.1 m/s^2.		

1220 Trencher - SPECIFICATIONS Page 44

WARRANTY

Ditch Witch Equipment and Replacement Parts North American* Limited Warranty Policy

Major Component Limited Warranty

Major components are warranted for a period of 1000 hours of use or one year, whichever occurs first, beginning on date of delivery of any such new product. The Major Component Limited Warranty covers only Major Components listed under Major Component Limited Warranty that are manufactured and distributed by The Charles Machine Works, Inc. ("CMW"). Replacement parts and other serial numbered products ("Products") that are not listed under Major Component Limited Warranty, and non-major components are covered under Product Limited Warranty.

Major Components are defined as:

- Frames.
- Differentials and parts contained within.
- Mechanical transmissions.
- Drive gearboxes and parts contained within.
- Hydraulic, hydrostatic, and fluid pumps, motors and components that control or protect pumps and motors.
- Auxiliary hydraulic control valves and electrical components used for controlling hydraulic components.
- Hydraulic cylinders and components excluding repair kits.
- Batteries, alternators, instruments, gauges, and protection components for electrical systems.
- Pierce Airrow bodies, strikers, and tailpieces.

Free replacement parts and labor will be provided at any authorized dealership for any part of Major Component which has a defect in material or workmanship within warranty period. Defects will be determined by an inspection of major component or part by CMW or its authorized dealer. The product containing a major component or part must be presented to CMW or its authorized dealer for inspection within 30 days of the date major component or part fails. CMW will provide the location of its inspection facilities or its nearest authorized dealer upon inquiry. CMW reserves the right to supply remanufactured replacement parts as it deems appropriate.

* Equipment owners in countries other than U.S., Canada, Mexico, and Puerto Rico should refer to Ditch Witch International Warranty Policy.

WARRANTY

WARRANTY

Ditch Witch Equipment and Replacement Parts North American* Limited Warranty Policy

Major Component Limited Warranty

Major components are warranted for a period of 1000 hours of use or one year, whichever occurs first, beginning on date of delivery of any such new product. The Major Component Limited Warranty covers only Major Components listed under Major Component Limited Warranty that are manufactured and distributed by The Charles Machine Works, Inc. ("CMW"). Replacement parts and other serial numbered products ("Products") that are not listed under Major Component Limited Warranty, and non-major components are covered under Product Limited Warranty.

Major Components are defined as:

- Frames.
- Differentials and parts contained within.
- Mechanical transmissions.
- Drive gearboxes and parts contained within.
- Hydraulic, hydrostatic, and fluid pumps, motors and components that control or protect pumps and motors.
- Auxiliary hydraulic control valves and electrical components used for controlling hydraulic components.
- Hydraulic cylinders and components excluding repair kits.
- Batteries, alternators, instruments, gauges, and protection components for electrical systems.
- Pierce Airrow bodies, strikers, and tailpieces.

Free replacement parts and labor will be provided at any authorized dealership for any part of Major Component which has a defect in material or workmanship within warranty period. Defects will be determined by an inspection of major component or part by CMW or its authorized dealer. The product containing a major component or part must be presented to CMW or its authorized dealer for inspection within 30 days of the date major component or part fails. CMW will provide the location of its inspection facilities or its nearest authorized dealer upon inquiry. CMW reserves the right to supply remanufactured replacement parts as it deems appropriate.

* Equipment owners in countries other than U.S., Canada, Mexico, and Puerto Rico should refer to Ditch Witch International Warranty Policy.

Product Limited Warranty

Products are warranted for 90 days from date of delivery of any new product. Free replacement parts and labor will be provided at any authorized dealership for any product which has a defect in material or workmanship within warranty period. Replacement parts are warranted for 90 days from date of delivery of any such replacement part. Any part of a product subject to ground contact is warranted only for defects in material or workmanship and only for the period of operational life of such part, which period shall not in any event exceed 90 days. Defects will be determined by an inspection of the product or part by CMW or its authorized dealer. The product or part must be presented to CMW or its authorized dealer for inspection within 30 days of the date of failure. CMW will provide the location of its inspection facilities or its nearest authorized dealer upon inquiry. CMW reserves the right to supply remanufactured replacement parts as its deems appropriate.

WARRANTY

Product Limited Warranty

Products are warranted for 90 days from date of delivery of any new product. Free replacement parts and labor will be provided at any authorized dealership for any product which has a defect in material or workmanship within warranty period. Replacement parts are warranted for 90 days from date of delivery of any such replacement part. Any part of a product subject to ground contact is warranted only for defects in material or workmanship and only for the period of operational life of such part, which period shall not in any event exceed 90 days. Defects will be determined by an inspection of the product or part by CMW or its authorized dealer. The product or part must be presented to CMW or its authorized dealer for inspection within 30 days of the date of failure. CMW will provide the location of its inspection facilities or its nearest authorized dealer upon inquiry. CMW reserves the right to supply remanufactured replacement parts as its deems appropriate.

Exclusions

from Major Component and Product Limited Warranty

Specifically excluded from Major Component and Product Limited Warranty are:

- Transportation charges related to repair, replacement, or inspection of products, major components, or parts.
- Parts subject to ground contact (including but not limited to drill pipe, downhole tools, digging chain, teeth and sprockets).
- All incidental or consequential damages.
- All defects, damages, or injuries caused by misuse, abuse, improper installation, alteration, neglect, or uses other than those for which products were intended.
- All defects, damages, or injuries caused by improper training, operation, or servicing of products in a manner inconsistent with manufacturer's recommendations.
- All engines and engine accessories (these are covered by original manufacturer's warranty).
- Parts which may be subject to another manufacturer's warranty (such warranty will be available to purchaser).
- All implied warranties not expressly stated herein, including any warranty of fitness for a particular purpose and merchantability.

IF THE PRODUCTS ARE PURCHASED FOR COMMERCIAL PURPOSES AS DEFINED BY THE UNIFORM COMMERCIAL CODE, THEN THERE ARE NO WARRANTIES WHICH EXTEND BEYOND THE FACE HEREOF AND THERE ARE NO IMPLIED WARRANTIES OF ANY KIND WHICH EXTEND TO A COMMERCIAL BUYER. ALL OTHER PROVISIONS OF THIS LIMITED WARRANTY APPLY INCLUDING THE DUTIES IMPOSED.

Ditch Witch products have been tested to deliver acceptable performance in most conditions. This does not imply they will deliver acceptable performance in all conditions. Therefore, to assure suitability, products should be operated under anticipated working conditions prior to purchase.

This limited warranty applies to the owner of the product. Some states do not allow exclusion or limitation of incidental or consequential damages, so above limitation of exclusion may not apply. Further, some states do not allow exclusion of or limitation of how long an implied warranty lasts, so the above limitation may not apply. This limited warranty gives owner specific legal rights and the owner may also have other rights which vary from state to state.

For information regarding this limited warranty, contact CMW's Product Support department, P.O. Box 66, Perry, OK 73077-0066, or contact your local Ditch Witch dealer.

Exclusions

from Major Component and Product Limited Warranty

Specifically excluded from Major Component and Product Limited Warranty are:

- Transportation charges related to repair, replacement, or inspection of products, major components, or parts.
- Parts subject to ground contact (including but not limited to drill pipe, downhole tools, digging chain, teeth and sprockets).
- All incidental or consequential damages.
- All defects, damages, or injuries caused by misuse, abuse, improper installation, alteration, neglect, or uses other than those for which products were intended.
- All defects, damages, or injuries caused by improper training, operation, or servicing of products in a manner inconsistent with manufacturer's recommendations.
- All engines and engine accessories (these are covered by original manufacturer's warranty).
- Parts which may be subject to another manufacturer's warranty (such warranty will be available to purchaser).
- All implied warranties not expressly stated herein, including any warranty of fitness for a particular purpose and merchantability.

IF THE PRODUCTS ARE PURCHASED FOR COMMERCIAL PURPOSES AS DEFINED BY THE UNIFORM COMMERCIAL CODE, THEN THERE ARE NO WARRANTIES WHICH EXTEND BEYOND THE FACE HEREOF AND THERE ARE NO IMPLIED WARRANTIES OF ANY KIND WHICH EXTEND TO A COMMERCIAL BUYER. ALL OTHER PROVISIONS OF THIS LIMITED WARRANTY APPLY INCLUDING THE DUTIES IMPOSED.

Ditch Witch products have been tested to deliver acceptable performance in most conditions. This does not imply they will deliver acceptable performance in all conditions. Therefore, to assure suitability, products should be operated under anticipated working conditions prior to purchase.

This limited warranty applies to the owner of the product. Some states do not allow exclusion or limitation of incidental or consequential damages, so above limitation of exclusion may not apply. Further, some states do not allow exclusion of or limitation of how long an implied warranty lasts, so the above limitation may not apply. This limited warranty gives owner specific legal rights and the owner may also have other rights which vary from state to state.

For information regarding this limited warranty, contact CMW's Product Support department, P.O. Box 66, Perry, OK 73077-0066, or contact your local Ditch Witch dealer.

WARRANTY

First version: 1/91; Latest revision: 4/99

First version: 1/91; Latest revision: 4/99

WARRANTY

A Note To
Ditch Witch
Equipment Owners:

If your equipment was purchased through a Ditch Witch dealer, there is no need to read further.

However, if you purchased from any other source, please fill out the form on the reverse side and return it to us.

This will enable you to receive updates on this equipment as well as information on new products of interest.

Thanks for using Ditch Witch equipment.

(Please Fold Along This Line And Seal At Bottom With Tape)

NO POSTAGE NECESSARY IF MAILED IN THE UNITED STATES

BUSINESS REPLY MAIL

FIRST CLASS PERMIT NO 23 PERRY OKLAHOMA

POSTAGE WILL BE PAID BY

The Charles Machine Works, Inc.
P.O. Box 66
Perry, Oklahoma 73077-9989

A Note To
Ditch Witch
Equipment Owners:

If your equipment was purchased through a Ditch Witch dealer, there is no need to read further.

However, if you purchased from any other source, please fill out the form on the reverse side and return it to us.

This will enable you to receive updates on this equipment as well as information on new products of interest.

Thanks for using Ditch Witch equipment.

(Please Fold Along This Line And Seal At Bottom With Tape)

NO POSTAGE NECESSARY IF MAILED IN THE UNITED STATES

BUSINESS REPLY MAIL

FIRST CLASS PERMIT NO 23 PERRY OKLAHOMA

POSTAGE WILL BE PAID BY

The Charles Machine Works, Inc.
P.O. Box 66
Perry, Oklahoma 73077-9989

Ditch Witch® Registration Card

Please Type or Print All Information

Purchaser's Company Name

Attention

Street Address or P.O. Box

City County

State Zip Nation

( )

Phone Number With Area Code

Model Serial Number

Attachments/Accessories Serial Numbers

Attachments/Accessories Serial Numbers

Attachments/Accessories Serial Numbers

Name of Ditch Witch Dealership

Your Signature

Ditch Witch® Registration Card

Please Type or Print All Information

Purchaser's Company Name

Attention

Street Address or P.O. Box

City County

State Zip Nation

( )

Phone Number With Area Code

Model Serial Number

Attachments/Accessories Serial Numbers

Attachments/Accessories Serial Numbers

Attachments/Accessories Serial Numbers

Name of Ditch Witch Dealership

Your Signature